21700/3.6V/62E 锂离子电芯规格书
Specification for 21700/3.6V/62E Lithium-ion Rechargeable Cell

型号：21700F

Model：21700F

文件编号 **Doc NO.**	YDLD/PS-RD-064	生效日期 **Effective Date**	2026-03-06
版本号 **Version**	A/01	页数 **Page**	18
编 制 **Drafted**	审 核 **Checked**	批 准 **Approved**	
刘良志	王左诚	相江峰	

客户名称 **Customer Name**	客户签字（盖章）/日期 **Customer Approval/ Date**	远东电池/远东锂电 签字（盖章）/日期 **FEB Approval/ Date**

©FEB All rights reserved.

Contents 目录

1 Preface 前言

2 Cell type，Barcode，Color 电芯型号、喷码、颜色

2.1 Description and model 电芯说明及型号

2.2 Cell barcode 电芯喷码

2.3 Cell color 电芯套膜颜色

3 Nominal Specification 标准规格

4 Technical requirements 技术要求

4.1 Cell testing conditions 电芯测试条件

4.2 Requirement of the testing equipment 测量仪表要求

4.3 Standard charge 标准充电

4.4 Standard discharge 标准放电

4.5 Characteristics 电池性能

4.6 Safety characteristics 安全性能

4.7 Status of the cell as of ex-factory 电芯出厂状态

4.8 Package schematic diagram 包装示意图

5 Cell safety criterion 电芯安全准则

5.1 Design and usage of chargers and battery packs 充电器和电池组设计及使用注意事项

5.2 Safety regulations 安全守则

6 The restriction for the use of hazardous substances 有害物质控制要求

7 Contact information 联系方式

©FEB All rights reserved.

1 Preface 前言

This specification describes the type, dimensions, performance, technical characteristics, warning and caution of the lithium ion rechargeable cell. The specification applies to 21700 cell supplied by Jiangxi Far East Battery co., LTD. and Jiangxi Far East LIB Co., Ltd. (Hereinafter referred to as FEB).

本标准描述了圆柱型锂离子电芯的外型尺寸、特性、技术要求及注意事项，本标准适用于江西远东电池有限公司和江西远东锂电有限公司（以下简称：远东电池）生产的圆柱型 21700 锂离子电芯。

2 Cell type，Barcode，Color 电芯型号、喷码、颜色

2.1 Description and model 电芯说明及型号

Description: 21700-62E is the model designation used by FEB for this specification cell (21700/6.0Ah), and does not involve the marking codes or the model name used for certification purposes

Designation: Lithium-ion rechargeable cell

Model: 21700F（Model name in CCC report）

Capacity：6000mAh

说明：21700-62E 是远东电池对本规格电芯(21700/6.0Ah)的型号标识，不涉及产品的喷码和认证的型号名

名称：锂离子可充电电芯

型号：21700F（CCC 报告型号名）

容量：6000mAh

2.2 Cell barcode 电芯喷码

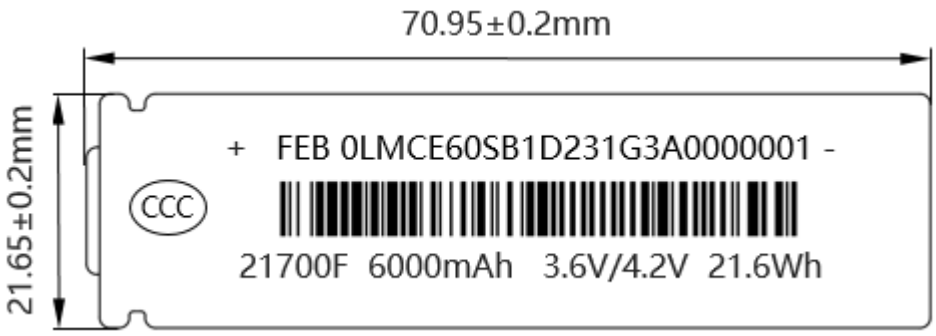

2.3 Cell color 电芯套膜颜色

Light Purple 浅紫

©FEB All rights reserved.

3 Nominal Specification 标准规格

Item 项目	Specification 特性	
Nominal capacity 标称容量	6000mAh	Cell Capacity Receiving Standard： Charge: 0.5C (3000mA), CCCV, 4.2V, 0.02C (120mA) cut-off; Discharge: 0.2C (1200mA),2.5V discharge cut-off
Minimum capacity 最小容量	6000mAh	
Nominal voltage 标称电压	3.6V	
Internal resistance 内阻	≤ 19 mΩ (AC Impedance, 1000 Hz)	
Limited charging voltage 充电限制电压	4.2V	
End of discharge voltage 放电终止电压	2.5V	
Charging cut-off current 充电截止电流	≥0.02C (120mA)	
Recommended charging current 推荐充电电流	0.5C (3000mA)	
Recommended discharge current 推荐放电电流	0.2C (1200mA)	
Max. continuous charge current （Cell surface temperature） 最大持续充电电流 （电芯表面温度）	0.5C (3000mA)	60°C>T≥45°C
	0.7C (4200mA)	45°C>T≥15°C
	0.5C (3000mA)	15°C>T≥5°C
	0.1C (600mA)	5°C>T≥0°C
Max. continuous discharge current （Cell surface temperature） 最大持续放电电流 （电芯表面温度）	0.5C (3000mA)	70°C >T≥45°C
	1C (6000mA)	45°C >T≥35°C
	2C (12000mA)	35°C >T≥0°C
	1C (6000mA)	0°C>T≥-20°C
Operating ambient temperature 工作环境温度	Charge: 0~45°C Discharge: -20~60°C 充电时：0~45°C 放电时：-20~60°C	
Cell surface temperature 电芯表面温度	Charge: 0~60°C Discharge: -20~70°C 充电时：0~60°C 放电时：-20~70°C （建议重新充电温度＜45°C，重新放电温度＜60°C） (recommended recharge release <45℃， recommended re-discharge release <60°C)	
Cell dimensions 电芯尺寸	Height: 70.95±0.2mm Diameter: 21.65±0.2mm 高度：70.95±0.2mm 直径：21.65±0.2mm	
Weight 重量	≤75g	

©FEB All rights reserved.

4 Technical requirements 技术要求

4.1 Cell testing conditions 电芯测试条件

Unless otherwise specified, all tests stated according to following:

除非有特殊说明，所有测试的条件要求如下：

Temperature: 25±2°C; Humidity: ≤85%RH

温度：25±2°C；湿度：≤85%RH

Use standard charge current and standard discharge current

使用标准充电电流与标准放电电流

The cell used in the test is the cell sampled within one week of delivery

测试使用的电池为交货一周内抽检的电池

4.2 Requirement of the testing equipment 测量仪表要求

Voltage meter: The precision is higher than 0.5 grade

电压仪表要求：测量电压的仪表精度不小于 0.5 级

Temperature meter: The precision is higher than ±0.5°C

温度仪表要求：测量温度的仪表精度±0.5°C

4.3 Standard charge 标准充电

Under 25±2°C, charge the cell at 0.5C rate (3000mA) to 4.2V with 0.02C rate (120mA) cut-off in CCCV mode.

25±2°C 环境下，将电芯以 0.5C（3000mA）恒流充电至 4.2V 后，转入恒压模式，截止电流为 0.02C（120mA）。

4.4 Standard discharge 标准放电

Under 25±2°C, discharge the cell at 1C rate (6000mA) to 2.5V.

25±2°C 环境下，将电芯以 1C（6000mA）恒流放电至 2.5V。

4.5 Characteristics 电池性能

<table>
<tr><th>NO.
序号</th><th>Item
项目</th><th>Standard
标准</th><th>Test Method
测试方法</th></tr>
<tr><td>1</td><td>Discharge characteristics (Room temperature)
放电特性
（室温）</td><td><table><tr><th>Rate
倍率</th><th>Current
电流</th><th>Discharge Efficiency
放电效率</th></tr><tr><td>0.2C</td><td>1200mA</td><td>100%</td></tr><tr><td>0.5C</td><td>3000mA</td><td>≥95%</td></tr><tr><td>1C</td><td>6000mA</td><td>≥93%</td></tr><tr><td>2C</td><td>12000mA</td><td>≥90%</td></tr></table></td><td>After standard charge, left the cell for 15 minutes. Than discharge the cell to 2.5V at 0.2C/0.5C/1C/2C rate, record the discharge capacity.
Note:
Discharge efficiency = discharge capacity at different rate / discharge capacity@0.2C ×100%

将电芯进行标准充电后，搁置 15min，分别以 0.2C、0.5C、1C、2C 电流放电至 2.5V，记录放电容量。
注：
放电效率=不同倍率下放电容量/0.2C 放电容量 ×100%</td></tr>
</table>

©FEB All rights reserved.

2	Cycle life 循环寿命	Discharge capacity (500th Cycle) ≥70% of 1st Cycle Capacity 第 500 周放电容量≥首次放电容量×70%	Perform 0.5C/1C (3000mA/6000mA, 4.20~2.75V, charge cut-off current 600mA) cycle for 500 times at room temperature, and record the final state of the cell after cycling. Note: During the cycle process, the rest time is 30 min after charge, and 30 min after discharge. 室温下进行 0.5C/1C（3000mA/6000mA，4.20~2.75V，充电截止电流 600mA）循环 500 次，循环后测量电池的最终状态。 备注：循环过程中充电后搁置 30min，放电后搁置 30min。
3	Storage characteristics (25±2°C) 存储特性	Residual capacity ≥ 85% of Initial capacity Recovery capacity ≥ 90% of Initial capacity 剩余容量≥初始容量×85% 恢复容量≥初始容量×90%	Perform standard charge and discharge to obtain initial capacity. Then store the standard charged cell under 25±2°C for 28 days. After storage, the cell shall be standard discharged to measure the remaining capacity. Standard charge / standard discharge cycle shall be repeated for 3 times to measure the recovery capacity. 对电芯进行标准充电和放电，从而获得初始容量。然后，将标准充电后的电芯搁置与在 25±2°C 环境下存储 28 天。存储结束后，对电芯进行标准放电，测量剩余容量；对该电芯进行三次标准充电和放电，测量恢复容量。
4	Storage characteristics (55±2°C) 存储特性	Residual capacity ≥ 85% of Initial capacity Recovery capacity ≥ 90% of Initial capacity 剩余容量≥初始容量×85% 恢复容量≥初始容量×90%	Perform standard charge and discharge to obtain initial capacity. Then store the standard charged cell under 55±2°C for 7 days. After storage, the cell shall be standard discharged to measure the remaining capacity. Standard charge / standard discharge cycle shall be repeated for 3 times to measure the recovery capacity. 对电芯进行标准充电和放电，从而获得初始容量。然后，将标准充电后的电芯搁置在 55±2°C 环境下存储 7 天。存储结束后，对电芯进行标准放电，测量剩余容量；对该电芯进行三次标准充电和放电，测量恢复容量。

©FEB All rights reserved.

<table>
<tr>
<td>5</td>
<td>Temperature-Dependent discharge characteristics
不同温度下的放电性能</td>
<td>
<table>
<tr><td>Temperature
温度</td><td>Discharge Efficiency
放电效率</td></tr>
<tr><td>25°C</td><td>100%</td></tr>
<tr><td>55°C</td><td>≥95%</td></tr>
<tr><td>-20°C</td><td>≥70%</td></tr>
</table>
</td>
<td>Perform standard charge and discharge to obtain initial capacity at 25±2°C. Let the standard charged cell under 55±2°C (or -20±2°C) rest for 5h (or 24h). After that, the discharge capacity is measured at 1C rate (6000mA) under the corresponding temperature (55±2°C or -20±2°C). The discharge cut-off voltage under 55±2°C and -20±2°C are 2.5V and 2.2V.
Note:
Discharge Efficiency = discharge capacity under different temperature / initial capacity ×100%

在 25±2°C 对电芯进行标准充电和放电，从而获得初始容量。将标准充电后电芯在 55±2°C（或-20±2°C）温度下静置 5h（或 24h），接着在相同温度下（55±2°C 或-20±2°C）测试电芯的 1C（6000mA）放电容量，55±2°C 和-20±2°C 温度下，放电终止电压分别为 2.5V 和 2.2V。
注：
放电效率=不同温度放电容量/初始容量×100%</td>
</tr>
</table>

4.6 Safety characteristics 安全性能

NO. 序号	Item 项目	Standard 标准	Test Method 测试方法
1	Overcharge 过充	No explosion, no fire 不爆炸、不起火	After standard charge, charge the cell at 1C rate (6000mA) until the charge time reaches 1h or the cell voltage reaches 1.5 times of the cut-off voltage of standard charge. The cell shall be observed for 1h afterwards. 标准充电后，以 1C 电流（6000mA）对电芯进行充电，直到充电时间达到 1h 或者电芯电压达到标准充电截止电压的 1.5 倍结束。之后观察电芯 1h。
2	Over discharge 过放	No explosion, no fire, no leakage 不爆炸、不起火、不漏液	After standard charge, discharge the cell at 1C rate (6000mA) for 1.5h. The cell shall be observed for 1h afterwards. 标准充电后，以 1C 电流（6000mA）对电芯放电 1.5h。之后观察电芯 1h。

©FEB All rights reserved.

3	Short circuit 短路	No explosion, no fire 不爆炸、不起火	After standard charge, short-circuit the cell by connecting positive and negative terminal with a copper wire for 10min. The cell shall be observed for 1h afterwards. Note: the wire resistance shall be less than 5mΩ. 标准充电后，使用外部线路将电芯正、负极经短路 10min。之后观察电芯 1h。 注：外部线路电阻应小于 5mΩ。
4	Drop 跌落	No explosion, no fire, 不爆炸、不起火	After standard charge, drop the cell with both ends from a height of 1.0m onto the cement floor. The cell shall be observed for 1h afterwards. 标准充电后，将电芯正负极端子向下由高度为 1.0m 的位置跌落到水泥地面上。之后观察电芯 1h。
5	Heating 加热	No explosion, no fire 不爆炸、不起火	After standard charge, put the cell in an oven at a heating speed of 5°C/min until the temperature of the oven reach 130°C. Keep the cell in the oven at 130°C for 30 minutes then stop heating. The cell shall be observed for 1h afterwards. 标准充电后，将电芯放进热箱里，然后将热箱按 5°C/min 升温到 130°C，电芯在热箱 130°C 环境下保持 30min 后停止加热。之后观察电芯 1h。
6	Seawater immersion 海水浸泡	No explosion, no fire 不爆炸、不起火	After standard charge, immerse the cell completely in 3.5wt%NaCl solution for 2h. The cell shall be observed for 1h afterwards. 标准充电后，将电芯完全浸入 3.5wt%NaCl 水溶液中 2h。之后观察电芯 1h。
7	Low pressure 低气压	No explosion, no fire, no leakage 不爆炸、不起火、不漏液	After standard charge, put the cell at a pressure of 11.6kPa for 6h at room temperature. The cell shall be observed for 1h afterwards. 标准充电后，将电芯放入低气压箱中，调节试验箱中气压为 11.6kPa，温度为室温，静置 6h。之后观察电芯 1h。

©FEB All rights reserved.

<table>
<tr>
<td>8</td>
<td>Temperature cycling
温度循环</td>
<td>No explosion, no fire, no leakage
不爆炸、不起火、不漏液</td>
<td>After standard charge, put the cell into a temperature controlled tank, then conduct the test according to the parameter and test for five times.

标准充电后，将电芯放入温控箱中，温控箱的温度按照以下参数进行调节，循环 5 次。
1）一个循环的温度和时间：
<table>
<tr><td>温度
°C</td><td>时间增量
min</td><td>累计时间
min</td><td>温度变化率
°C/min</td></tr>
<tr><td>25</td><td>0</td><td>0</td><td>0</td></tr>
<tr><td>-40</td><td>60</td><td>60</td><td>13/12</td></tr>
<tr><td>-40</td><td>90</td><td>150</td><td>0</td></tr>
<tr><td>25</td><td>60</td><td>210</td><td>13/12</td></tr>
<tr><td>85</td><td>90</td><td>300</td><td>2/3</td></tr>
<tr><td>85</td><td>110</td><td>410</td><td>0</td></tr>
<tr><td>25</td><td>70</td><td>480</td><td>6/7</td></tr>
</table>
2）示意图：
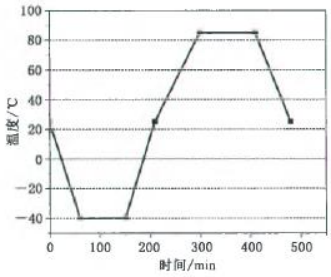

</td>
</tr>
</table>

Comments: the definitions of some nomenclatures for this specification

备注：以上标准中的一些术语的定义：

（1） Initial State: The initial appearance, open-circuit voltage and internal resistance of cell.

初始状态：电池的初始外观、开路电压、交流内阻。

（2） Final State: The final appearance, open-circuit voltage and internal resistance of cell.

最终状态：电池的最终外观、开路电压、交流内阻。

（3） Residual Capacity: After a specific testing program, the first discharge capacity of cell.

剩余容量：电池经过特定的检测程序后的首次放电容量。

（4） Recovery capacity: After a specific testing program, and through the repeatedly charging and discharging to the recovery state, then the discharge capacity of cell.

恢复容量：电池经过特定的检测程序后，通过反复充放电使状态恢复后的放电容量。

（5） The short-term maximum temperature on the surface of the battery cell during charging should be ≤60°C, and the short-term maximum temperature on the surface of the battery cell during discharging should be ≤70°C. (In these cases, the charge and discharge will cause the battery cycle life to decay quickly)

充电过程中电芯表面的短时间最大温度应≤60°C，放电过程中电芯表面的短时间最大温度应≤70°C，（在这些情况下充放电将会导致电池循环寿命很快衰减）

©FEB All rights reserved.

4.7 Status of the cell as of ex-factory 电芯出厂状态

The cell should be shipped in 3.5V~3.7V Charging voltage range.

电芯运输过程中，电压应在 3.5V～3.7V 范围内。

4.8 Package schematic diagram 包装示意图

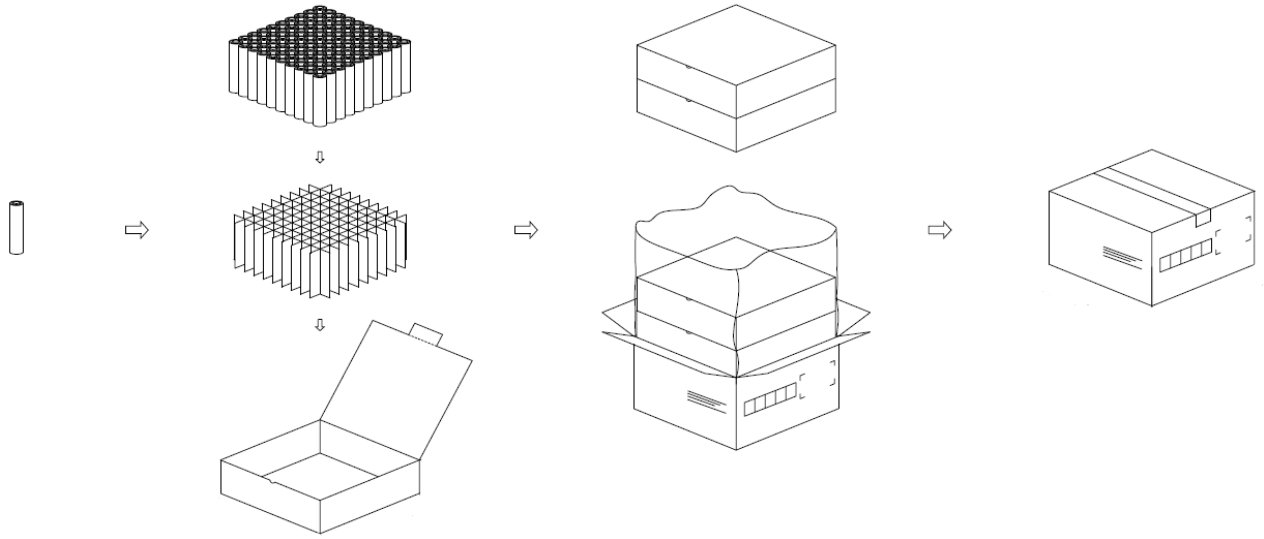

1、电芯装于内箱中用刀卡隔开；
2、每内箱10*10共100pcs电芯；

1、2pcs内箱上下堆叠外包PE带放置于外箱中；
2、每外箱2*100共200pcs电芯；

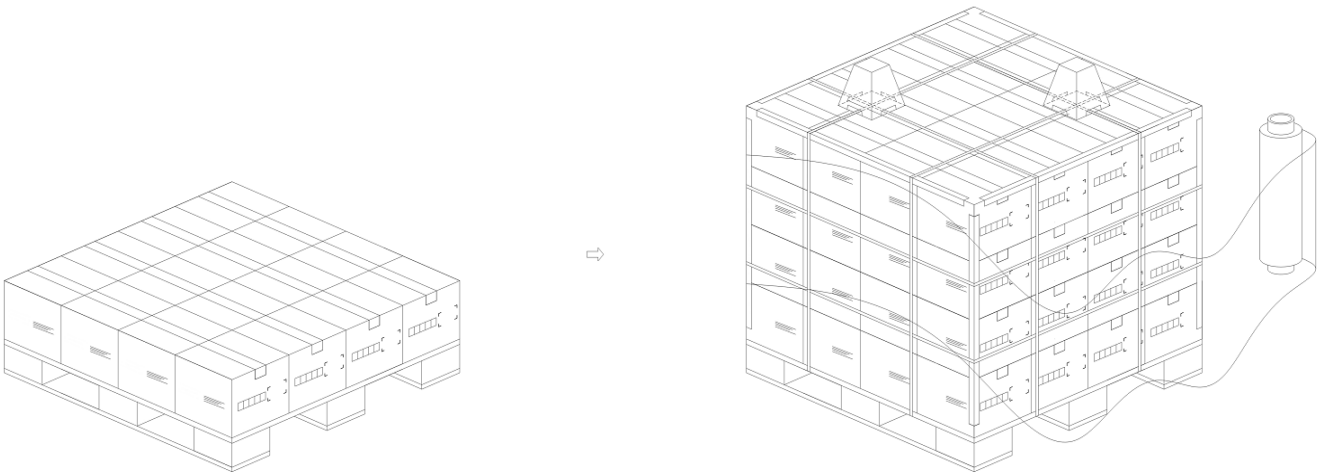

1、每层16箱，最大堆叠层数5层/托；
2、80箱/托，16000pcs电芯/托；
3、纸箱摆放朝向统一（含标签面同方向）

1、每个棱边都需用护角保护（8条）；
2、拉伸膜包覆不得小于三层；
3、扎带材质：PP，按上图方式进行捆扎；
4、顶部放置2pcs防压塔。

©FEB All rights reserved.

5 Cell safety criterion 电芯安全准则

5.1 Design and usage of chargers and battery packs 充电器和电池组设计及使用注意事项

5.1.1 Charge 充电

5.1.1.1 The cell should be charged by constant current charge - constant voltage charge. The charging voltage of a single cell should not exceed 4.20V, and the cut-off current of charging should be greater than or equal to 1/50C (120mA). Considering the control deviation of the charger, the charging voltage of the cell must be lower than 4.20V. Even in exceptional circumstances, the charging voltage shall not exceed 4.25 V to avoid overcharging. Charging voltage higher than 4.20V will shorten the cell cycle life.

电芯应该使用恒流-恒压充电的方式进行充电。单体电芯的充电电压不能超过 4.20V，充电截止电流大于等于 1/50C（120mA）。考虑到充电器的控制偏差，必须保证电芯充电电压低于 4.20V。即使在异常情况下，充电电压不可超过 4.25V 以避免过充电。充电电压高于 4.20 V 会导致电芯循环寿命缩短。

5.1.1.2 Chargers should be equipped with a complete charge detection device. The charging detection device can be checked by timer, current detection or open circuit voltage detection to detect the charging state. When the charging detection device detects that the cell is fully charged, the charging circuit should be completely cut off to avoid trickling charge. The operating ambient temperature range for cell charging is 0°C to +45°C. During the charging process, if the surface temperature of the cell exceeds 60°C, charging must be terminated. It should be placed until the cell temperature reaches the above range.

充电器应该配备一个完整的充电检测装置。充电检测装置能够通过计时器、电流检测或者开路电压检测，检测到电池满充电的状态。当充电检测装置检测到电池充满电后，应该完全切断充电电路，避免产生涓流充电。电芯充电环境温度范围为 0°C~+45°C。充电过程中，如果电芯表面温度超过 60°C，必须终止充电。应将其静置直至电芯温度达到上述范围。

5.1.2 Discharge 放电

5.1.2.1 Single cell discharge current should be less than maximum discharge current.

单体电芯放电电流需小于最大放电电流。

5.1.2.2 The discharge cutoff voltage of the cell shall be higher than 2.5V;

电芯放电终止电压需高于 2.5V；

5.1.2.3 The discharge temperature of the cell range from -20°C to +60°C. During the discharge process, if the surface temperature of the cell exceeds 70 °C, the discharge must be terminated.

电芯放电温度范围为-20°C ~ +60°C，放电过程中，如果电芯表面温度超过 70°C，必须终止放电。

5.1.3 Over-discharges 过放电

If the voltage of a single cell is lower than 2.5V, the cell is considered to be over discharged and cannot be used anymore.

如果单体电池的电压低于 2.5V,电池被认为是过放电,不能继续使用。

5.1.4 Storage 存储

The cell should be stored in a dry (0~50%RH) and non-corrosive gas environment, do not allow the cell to bear any pressure, and there should be no condensed liquid attached to the surface of the cell.

电芯应在干燥（0~50%RH）无腐蚀性气体的环境下储存，不要让电芯承受任何压力，且不能有冷凝液体附着在电芯表面。

©FEB All rights reserved.

Item 项目	Conditions 环境	Permissible time 允许时间
Storage environment 存储环境	-20°C~+40°C	Less than 3 months 3 个月之内
	-20°C~+20°C	3 months to 12 months 3 个月~12 个月
For long-term storage of cells (exceeding 3 months), the voltage shall be maintained within 3.5–3.7V. Cells with voltage below 3.5V shall be recharged at 0.5C at three-month intervals during the shelf life. 电芯长期（3 个月以上）存储，电压应保持在 3.5~3.7V 范围，保质期内每隔 3 个月对电压低于 3.5V 电池，用 0.5C 电流进行补电。		

5.1.5 Considerations for battery pack design 电池组设计的注意事项

5.1.5.1 The shape, mechanism and material of the battery pack 电池组的形状、机理和材料

The battery pack should be designed so that it cannot be charged by an unauthorized charger. The battery pack design should ensure that it does not connect to unauthorized equipment.

电池组设计应该保证其不能被未授权的充电器进行充电。电池组设计应该保证其不能与未授权的设备进行连接。

The positive and negative ends of the battery pack should be designed to avoid short circuit or reverse connection.

电池组正负极两端应该设计成避免短路或正负极发生反接的结构。

In addition, the battery pack should have an overcurrent protection device to avoid the occurrence of external short circuit.

此外，电池组应该有过电流保护功能的装置，来避免外短路的情况发生。

There should be no overlap between the positive and negative connection wires of the battery pack.

电池正、负极连接导线不应有重叠现象。

The battery pack should be designed to prevent static electricity and dust, liquids, etc.

电池组设计应该具有防静电功能并且能够阻止灰尘、液体等侵入

The battery pack should be designed to consider that the electrolyte will not reach the protective circuit board even if the cells leakage happen.

电池组应该设计成即便电池发生了漏液，电解液也不能到达保护线路板。

The design of the battery pack should ensure that the cells are fixed in the battery pack and not arbitrarily movable. The battery pack shall be structurally designed to prevent the occurrence of dents, deformations or other mechanical stresses on the cells in the event of a predictable fall.

电池组设计上应保证电池固定在电池组内，不能任意移动。电池组在结构上应保证在出现可预见的跌落后不能使电池出现凹痕，变形和其他机械应力。

The flammability of materials used in the battery pack, such as double-sided tape and rubber, should be verified. 电池组使用的材料例如双面胶带和橡胶应该验证其可燃性。

©FEB All rights reserved.

5.1.5.2 **Battery pack structure (Cell number limitation)电池组结构（电池组限制使用的电池数量）**

The number of parallel connections is unlimited, but the battery pack must pass the overcharge test (the charging current of the overcharge test is the product of the maximum charging current of the charger and the number of parallel connections).

并联个数无限制 但是电池组必须通过过充电测试（过充测试的充电电流为充电器的最大充电电流与并联数量的乘积）。

The number of serial connections is unlimited, and series fuses are required.

串联个数无限制，需要保险丝。

The cell should be kept away from heating electronic components to avoid deterioration of cell performance. Insulation should be provided between the PCB'A and the battery pack (e.g. plastic barrier for air isolation or non-thermal conductive insulation).

电池应该远离发热电子元器件以避免电池性能的劣化。PCB'A 线路板和电池组之间应该有绝热材料进行隔绝（例如塑料屏障给予空气隔离或非导热电材料隔离）。

5.1.5.3 **Protection circuit 保护电路**

The following protection circuit should be installed in the battery pack

下面的保护电路应该安装在电池包内

Over charge protection

过充电保护

For safety reasons and in order not to shorten cycle life, the maximum overcharge protection voltage of the single cell in each module should be less than 4.2V.

出于安全的原因和为了不缩短循环寿命，每个模块内的单体电池的最大过充保护电压应该低于 4.2V。

Over discharge protection

过放电保护

If the single cell voltage reaches 2.5V, FEB recommends that the discharge current should be cut off by over discharge protection circuit, and the consumption current of the protection circuit should be no more than 100μA.

如果单体电芯电压达到 2.5V，远东电池建议过放电保护应该切断放电电流，建议外电路的漏电流≤100μA。

Over current protection

过电流保护

If the discharge current of a single cell exceeds about maximum discharge current, the overcurrent protection should cut off the discharge current.

如果单体电池放电电流超过最大持续放电电流，过电流保护应该切断放电电流。

Protection circuit power consumption

保护电路功耗

In order to avoid over discharge mode in long-term storage, the current consumption of the battery pack protection circuit should be set as small as possible. When it is not in use for a long time, it is necessary to check the residual state of the cell regularly and ensure that each single cell in the battery pack cannot reach the over-discharge state.

©FEB All rights reserved.

为了避免长期存储出现过放电模式，电池包保护线路的消耗电流应该设置的尽量小。长期未使用时，要定期检查电量剩余状态，要确保电池组内各单体电芯不能达到过放状态。

5.1.5.4 **Cell connection 电池连接**

The cells cannot be connected using soldering process. In order to avoid any damage, resistance welding or laser welding is recommended for cell connection.

电池不能使用锡焊的工艺进行连接。为了避免任何损伤，建议采用电阻焊或者激光焊的方式进行电池连接。

Cells in battery pack should be temperature balanced. When the battery pack is discharging, the internal temperature difference of the battery pack should be less than or equal to 5°C.

电池组应该尽量热均衡，电池包在放电时，内部电芯温差应小于等于 5°C。

5.1.6 Usage mode of cell 电芯使用方式

5.1.6.1 When the cell is used in tandem, the same grade, the same batch and the same charging state are necessary. This information can be obtained from the label of the inner and outer box. Before the cell is used, the voltage, internal resistance should be detected and assembled according to its purpose. FEB suggests that the cell voltage within 20 mV and the internal resistance difference within 6mΩ should be guaranteed at least.

电芯进行串并使用时，需使用相同档位，相同批次及相同充电状态电芯，可以从内外箱标签上获得此信息。电芯使用前需检测电压内阻，并按照其用途进行组配，远东电池建议至少保证组配使用电芯电压 20mV 以内，内阻差 6mΩ 以内。

5.1.6.2 Check voltage, internal resistance, protection circuit function, thermistor, thermal fuse of battery pack before shipment.

出货前电池包检查电压、内阻、保护线路功能、热敏电阻、热熔断器。

5.1.6.3 Special attention should be paid to the transfer of the cell to the assembly plant. External damage caused by the transport process is forbidden. FEB recommends using the same transport packaging, even if the packaging is opened during the process.

电芯中转至组装工厂过程要特别注意禁止运输过程造成外力损伤，转运过程远东电池建议使用相同的运输包装，即使过程中存在打开包装的情况。

5.1.6.4 Do not use damaged or leaking cells which caused by transportation damage, drop, short circuit or other reasons.

不要使用由于运输损伤，跌落，短路或其它原因造成破损或漏液电芯。

5.1.7 Quality assurance immunity 质保豁免

5.1.7.1 Within one year of normal use, any quality problem caused by any manufacturing process, other than abuse, shall be solved by the manufacturer. Outside this period, the reason is not the manufacturing process but the cell quality problem caused by customer misuse. FEB does not promise free replacement.

电池正常使用一年内，经确认出现任何制程而非滥用原因造成的质量问题，均由生产厂方予以解决。此期限外，非制程原因而是客户误用造成的电池质量问题，远东电池不承诺免费更换。

5.1.7.2 When conducting resistance welding and laser welding of cells, it is necessary to conduct DOE process experiment and confirm welding parameters. FEB is not responsible for the safety problems related to internal damage of the cell caused by improper welding.

在对电池进行电阻焊、激光焊时，需要进行 DOE 工艺实验，确认焊接参数。因不当焊接而引起电芯内部损伤造成的安全问题，远东电池不承担责任；

©FEB All rights reserved.

5.1.7.3 FEB shall not be liable for any loss caused by violation of the specifications;

远东电池对因违反规格书内注意事项造成的任何损失不承担责任；

5.1.7.4 FEB will not be responsible for any problems caused by design defects of battery packs and chargers;

远东电池对因电池包和充电器的设计缺陷造成的任何问题不承担责任；

5.1.7.5 FEB does not accept abnormal cells due to improper assembly.

远东电池不接受因不正确的组装过程造成的异常电池。

5.1.7.6 FEB is not responsible for spot welders；

远东电池对点焊品不承担责任

5.2 Safety regulations 安全守则

The cell contains organic solvent and other flammable substances, improper use may lead to cell self-heating or catch fire, causing damage to the cell or personal injury. Please pay attention to the prohibited matters, and should add protective devices to avoid cell accident caused by appliance failure. Before using a lithium ion rechargeable cell, read the following safety guidelines carefully. In addition, it is strongly recommended that these instructions be incorporated into the user manual.

电芯含有有机溶剂等易燃物质，如使用不当可能引起电芯产热或起火，造成电芯的损害或人身的伤害。请注意使用禁止事项，同时应增加保护装置以避免使用设备异常造成电芯事故。在使用锂离子可充电电芯以前，请仔细阅读以下的安全守则。此外，强烈建议把这些指令加入到用户手册中。

5.2.1 Dangerous items 危险事项

5.2.1.1 Do not use or place the cell in a high temperature environment (above 70°C). Do not throw cells into fire, water or exposed to moisture. Do not repair or disassemble the cell. There is a risk of ignition, overheating, leakage, or explosion.

不要使用或放置电芯于高温（高于 70°C）环境中。不要将其投入火中，水中或使其吸湿。不要修理或拆解电芯，存在引发电芯起火、过热、漏液或爆炸的危险。

5.2.1.2 Do not put the cell disorderly, at the same time away from metal and other conductive materials, to avoid positive (+) negative (-) short circuit, do not reverse the cell positive (+) negative (-) pole use.

不要将电芯混乱摆放，同时远离金属等导电材料，以避免正（+）负（-）极短路，不要颠倒电芯正（+）负（-）极使用。

5.2.1.3 Do not use unauthorized charging equipment or violate charging requirements. Unauthorized charger can lead to overcharging of the cell or abnormal chemical reactions, heating, smoke, rupture or fire.

不要使用非规定充电设备和违反充电要求。非规定条件充电会引发电芯过充电或异常化学反应，发生产热，冒烟，破裂或起火情况。

5.2.1.4 Do not connect the cell to the AC plug (outlet) or the facilities plug. Cells need to have a specific charger. If the cell is connected directly to the plug, it may catch fire, smoke, explode or emit heat.

将电池与 AC 插头（出口）或设备插头连接。电池需要有特定的充电器。如果电池与插头直接连接，电池可能会着火，冒烟，爆炸或者引起发热。

5.2.1.5 Do not overcharge, over discharge, needling or hammer the cell.

不要过充、过放、针刺、锤击电芯。

©FEB All rights reserved.

5.2.1.6 Do not strike or throw the cell. If the cell falls, please treat it as waste products and do not continue to be used.

不要撞击或投掷电芯。如果电芯出现跌落，请当废品处理，不能继续使用。

5.2.1.7 Do not dissect the cell. If the protective circuit is damaged, the cell will no longer be protected. Then, the cell may catch fire, smoke, explode or emit heat.

不要解剖电池。如果保护线路受到破坏，电池将不再被保护。然后，电池可能着火，冒烟，爆炸或者引起发热。

5.2.1.8 Do not charge in high temperatures environment. Because of the protective circuit action, cell cannot be recharged in high temperatures environment. In this situation, the protection line may be interrupted, and the cell may catch fire, smoke, explode, or emit heat.

不要在靠近高温处充电。如果电池在靠近高温处充电，电池由于保护线路动作，不能再充电。在这种状况下，保护线路可能发生中断，电池可能着火，冒烟，爆炸或者引起发热。

5.2.1.9 Do not use damaged or deformed cells, these cells may catch fire, smoke, explode, or emit heat.

不要使用明显损坏或者形变的电池。可能会造成发热，冒烟，破裂或者燃烧。

5.2.1.10 Do not solder the cell directly. Overheating can cause deformation of cell components such as insulation washers, causing deformation of the cell, leakage, explosion or fire.

不要直接锡焊焊接电芯，过热会导致绝缘垫圈等电芯部件变形，引发电芯变形、漏液、爆炸或者起火。

5.2.1.11 Do not reverse charge. Abnormal chemical reactions occur when the cell is recharged in reverse. In addition, the discharge will have unpredictable large current. These can emit heat, smoke, cracking or burning.

不要反极性充电。在充电时，电池被反向充电会发生不正常的化学反应。并且，在放电时会有不可预料的大电流通过的情况。这些可能会造成发热，冒烟，破裂或者燃烧。

5.2.2 Cautions 警告事项

5.2.2.1 Cells should be stored away from infants and toddlers. If cell swallowing occurs, seek medical attention immediately.

电池应该远离婴幼儿存放。出现吞咽电池的情况，请立即就医。

5.2.2.2 Do not put cells in microwave ovens or other cooking utensils. Cells can catch fire due to microwave heating and electrical shock, to emit smoke, explosion, or emit heat.

不要把电池放在微波炉或其他煮食用具中。由于微波炉的加热和电气冲击，电池可能会着火，冒烟，爆炸或者引起发热。

5.2.2.3 Don't mix it with other cells. Cells should not be mixed with other cells of different capacities, chemical systems or manufacturers. Don't Connect to other cells or mix other cells. Cells can catch fire, smoke, explode or emit heat.

不要和其他电池一起混用。电池不能和其他不同容量，化学体系或者生产商的电池混用。不要连接其他电池或者混合其他电池。电池可能会着火，冒烟，爆炸或者引起发热。

5.2.2.4 Do not use abnormal cells. Discontinue use if there are obvious abnormalities, such as odor, fever, deformity, or discoloration

不要使用不正常的电池。如果有明显的异常，例如异味、发热、畸形或者变色，请停止使用电池。这样的电池可能有缺陷，如果继续使用，可能会导致着火，冒烟，发热或者爆炸。

©FEB All rights reserved.

5.2.2.5 If the charging process does not end, stop charging. the cell cannot be charged within the specified time, please stop charging

如果充电过程不能结束，停止充电。如果电池在规定的时间内不能完成充电过程，请停止充电步骤。电池可能会着火，冒烟，爆炸或者引起发热。

5.2.2.6 Do not use drain cells near flame. If the cell or cell with liquid running out produces a pungent odor, keep cells away from flame, it can cause fire or explosion.

不要在靠近火焰的地方使用漏液电池。如果电池或者有液体流出的电池产生刺鼻性气味，电池应该保持远离火焰。电池可能会被点燃或者爆炸。

5.2.2.7 Do not touch the leaky cell. If fluid from the cell leaks into the eye, it can cause serious damage, flush immediately with fresh water and seek medical advice.

不要触摸漏液电池。如果从电池漏出的液体进入眼中，将会造成严重损害。如果从漏出的液体进入您的眼中，请立即用清水冲洗眼睛。请立即咨询医生。如果液体留在眼中，将会造成严重损害。

5.2.2.8 In order to avoid short circuit or damage, please tightly pack the cell into a box or carton.

为了避免短路或者损伤，请紧紧地将电池装入一个盒体或纸箱内。

5.2.3 Matters Requiring attention 注意事项

5.2.3.1 Do not use or place cells in hot environments, such as facilities in direct sunlight. Cells may catch fire, smoke, explode or emit heat. At the same time, it may cause deterioration of cell performance and life.

不要在高温环境使用或放置电池，例如在阳光直射下的设备中。电池可能会着火，冒烟，爆炸或

者引起发热。同时，可能会造成电池性能和寿命的劣化。

5.2.3.2 The battery pack has protective wiring. Do not use cells where static electricity (over 100V) is generated, as it may damage the protective circuit. Such as catch fire, smoke, explode or emit heat.

电池包有保护线路。在产生静电（超过 100V）的地方，不要使用电池，可能会损害保护线路。如

果电池的保护线 路被破坏，电池可能会着火，冒烟，爆炸或者引起发热。

5.2.3.3 The charging temperature range is between 0°C and 45°C. Do not charge the cell outside the specified temperature range. Otherwise, it may emit heat, fluid leakage, or serious damage. In addition, it may cause deterioration of cell performance and life.

充电温度范围规定在 0°C~45°C 之间。不要在规定的温度范围外对电池进行充电。否则，会导致产热、漏液、或者严重损害。另外，可能会造成电池性能和寿命的劣化。

5.2.3.4 Please read the manual before use. Please keep this manual properly for future reference.

在使用前请阅读手册。请妥善保存本手册以供将来参考。

5.2.3.5 Please read the charger manual for charging methods.

请阅读充电器手册的充电方法。

5.2.3.6 If the cell has abnormal odor, heat or rust during the first use, please contact the supplier.

在首次使用时，如果电池有不正常气味，发热或者生锈，请联系供货商。

5.2.3.7 Keep away from flammable materials during charging and discharging. It can cause fire, smoke, explosion or heat up.

©FEB All rights reserved.

在充放电过程中，请远离易燃材料。可能会造成着火，冒烟，爆炸或者引起发热。

5.2.3.8 If the electrolyte leaks from the cell and gets on clothes or skin, rinse immediately with water. Otherwise, it may irritate the skin.

如果电解液从电池中泄露，沾到衣服或者皮肤上，立即用水进行冲洗。否则，可能会刺激皮肤。

5.2.3.9 If wires or metal objects come out of the cell, completely seal and insulate them. Otherwise, the cell may cause a short circuit, which occurs fire, smoke, explosion, or emit heat.

如果导线或金属物体从电池出来，请把它们完全密封和绝缘。否则，电池可能造成短路，发生着火，冒烟，爆炸或者引起发热。

5.2.3.10 After use, please recycle the cell according to local laws and regulations.

使用后，请根据当地的法律、法规进行电池回收。

6 The restriction for the use of hazardous substances 有害物质控制要求

This model of lithium-ion cell is in accordance with our company's request of "environmental substances control standard".

本型号锂离子电池符合本公司“环境物质控制标准”要求！

7 Contact information 联系方式

If you have any questions regarding the cell, please contact the following address:

如有疑问，请按以下地址联系：

No. 39 Jingfa Road, Yichun Economic Development Zone, Jiangxi Province, China

厂址：江西宜春经济技术开发区经发大道 39 号

©FEB All rights reserved.